2

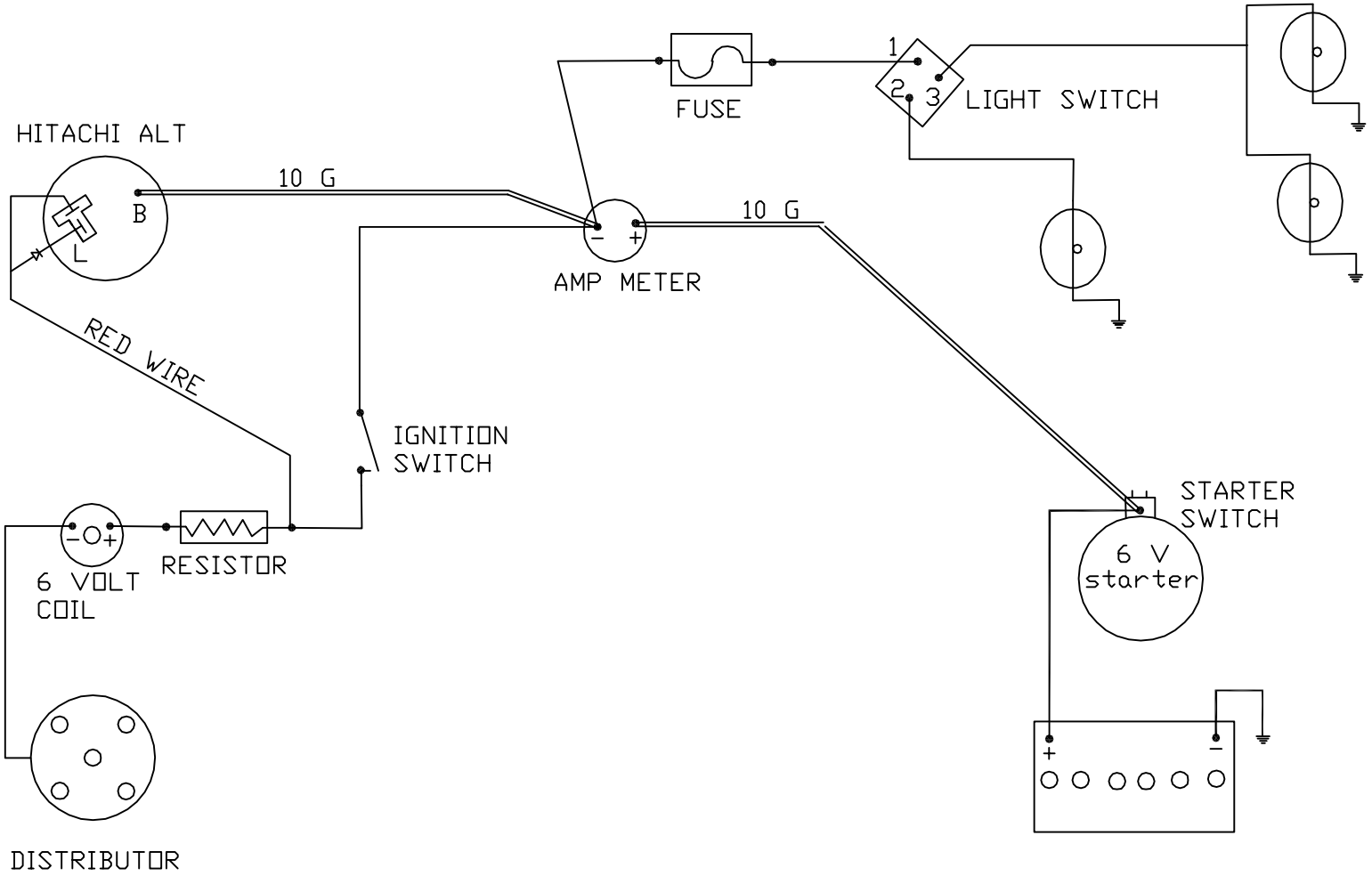

FARMALL SUPER H/M/MTA W/HITACHI ALTERNATOR
6 VOLT COIL AND RESISTOR

Charlie's Repair
22195 state Hwy 56
Austin, MN 55912
507-438-8172
www.charliesrepair.com